CONSOLIDATED STERILIZER SYSTEMS

Models	
SSR-2A (16" x 16" x 26")	
SSR-3A (20" x 20" x 38")	
SR-24A (24" x 24" x 36")	
SR-24B (24" x 24" x 48")	
SR-26A (26" x 26" x 39")	

Consolidated Sterilizers

Designed to Transform Your Laboratory

Small Lab Series Steam Sterilizers General Specifications

General Specification

Steam Sterilizer, Radial-Arm Door(s), Hinged, Single Chamber, Double Wall

Consolidated Small Lab Series Sterilizers are designed to sterilize at temperatures between 212° F and 275° F (100° C and 135° C) through the use of steam. Choose from a variety of sizes and programmable control options for pre-vacuum or gravity operation. Consolidated sterilizers offer a range of performance options to meet the most demanding applications in clinical, animal and life science, biotechnology, pharmaceutical, and commercial/industrial applications.

Table of Contents

- Model Sizes and Weights.....2
- Sterilizer Construction.....2
- X1 Controller.....5
- Sterilization Cycles.....6
- Options & Accessories.....8
- Validation.....9
- Site Preparation and Utilities.....10
- Installation.....10
- Footprint Drawings.....11
- Utility Information.....13

Features and Benefits

Simplified Maintenance, Low Cost of Ownership.
All Consolidated sterilizers are manufactured in the USA and built from commonly available parts to allow quick and cost effective field-level service and maintenance.

Serviceability.
Easy access to replaceable components, local component availability and common electrical and plumbing parts permit qualified facility or area service companies to maintain the sterilizer.

Control Flexibility.
A choice of programmable controllers allows a broad range of performance functions, complete with alarm, monitoring and communications required for internal or third-party compliance.

Performance Cycles—Basic to Advanced.
The fully-jacketed sterilizer design permits vacuum and pressure control when configured for pre-vacuum, post-vacuum, and more sophisticated functions such as air-over-pressure. Consolidated sterilizers are ideal for sterilizing wrapped and unwrapped goods, liquids, waste, and other applications.

Green and Environmentally Friendly.
Unique, new technologies reduce water and energy consumption without compromising performance.

Cloud-Enabled.
Consolidated sterilizers can be connected to the internet and can be pre-configured for cloud-based monitoring, alerting and data collection.

Consolidated Small Lab Series Sterilizers are available in single door, pass-thru and dual (tower) models. A versatile control system offers a range of performance options to meet the most demanding applications in life science, biotechnology, pharmaceutical, and commercial/industrial applications. Model PT-SR-24A-X1 shown with X1™ control system.

MODEL SIZES & WEIGHT

Summary Selection Chart

Consolidated Small Lab Series sterilizers are based on five chamber sizes, both single door and pass-thru models. All doors are right-hinge standard. Optional left-hinge doors must be specified when ordering.

Model	Chamber Dimensions (w x h x f-b)	Volume (cu. ft./ liters)	Ship Weight (lbs/kg)	Ship Dimensions (w x h x f-b)
Single Chamber Models				
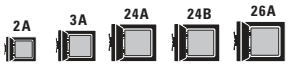 2A 3A 24A 24B 26A				
SSR-2A	16" x 16" x 26" 40.6 x 40.6 x 66 cm	3.9 cu. ft. 110 liters	1,150 lbs 523 kg	37" x 77" x 54" 94 x 195.6 x 137.2 cm
SSR-3A	20" x 20" x 38" 50.8 x 50.8 x 96.5 cm	8.8 cu. ft. 249 liters	1,650 lbs 750 kg	37" x 77" x 68" 94 x 195.6 x 172.8 cm
SR-24A	24" x 24" x 36" 61 x 61 x 91.4 cm	12 cu. ft. 340 liters	2,300 lbs 1,045 kg	46" x 77" x 66" 116.8 x 195.6 x 167.6 cm
SR-24B	24" x 24" x 48" 61 x 61 x 122 cm	16 cu. ft. 453 liters	2,500 lbs 1,136 kg	46" x 78" x 78" 116.8 x 198.1 x 198.1 cm
SR-26A	26" x 26" x 39" 66 x 66 x 99 cm	15.25 cu. ft. 432 liters	2,450 lbs 1,113 kg	46" x 77" x 69" 116.8 x 195.6 x 175.3 cm
Single Chamber, Pass-thru Models				
2A 3A 24A 24B 26A				
PT-SSR-2A	16" x 16" x 26" 40.6 x 40.6 x 66 cm	3.9 cu. ft. 110 liters	1,300 lbs 591 kg	37" x 79" x 57" 94 x 200.7 x 144.8 cm
PT-SSR-3A	20" x 20" x 38" 50.8 x 50.8 x 96.5 cm	8.8 cu. ft. 249 liters	1,800 lbs 819 kg	37" x 79" x 68" 94 x 200.7 x 172.8 cm
PT-SR-24A	24" x 24" x 36" 61 x 61 x 91.4 cm	12 cu. ft. 340 liters	2,650 lbs 1,205 kg	44" x 78" x 66" 182.9 x 198.1 x 167.6 cm
PT-SR-24B	24" x 24" x 48" 61 x 61 x 122 cm	16 cu. ft. 453 liters	2,850 lbs 1,295 kg	44" x 78" x 78" 182.9 x 198.1 x 198.1 cm
PT-SR-26A	26" x 26" x 39" 66 x 66 x 99 cm	15.25 cu. ft. 432 liters	2,800 lbs 1,273 kg	46" x 77" x 69" 116.8 x 195.6 x 175.3 cm
Dual Chamber, Tower Models				
2A 3A	Per Chamber		Total	
	Interior	Volume	Ship Weight	Ship Dimensions
2SSR-2A	16" x 16" x 26" 40.6 x 40.6 x 66 cm	3.9 cu. ft. 110 liters	2,250 lbs 1,125 kg	43" x 87" x 61" 109.2 x 221 x 154.9 cm
2SSR-3A	20" x 20" x 38" 50.8 x 50.8 x 96.5 cm	8.8 cu. ft. 249 liters	3,250 lbs 1,477 kg	43" x 87" x 61" 109.2 x 221 x 154.9 cm

High Performance Sterilization

Consolidated sterilizers are used in a wide range of applications including clinical, animal and life science, biotechnology, pharmaceutical, and commercial/industrial markets. Consolidated sterilizers are suitable for conventional or pre-vacuum sterilization for quality control, safety and regulatory compliance. In addition, all units can be customized to suit any unique requirements and applications of a particular facility.

Consolidated uses only commonly-available, open-source parts in all phases of sterilizer design and construction, thereby permitting quick, economical and locally-managed service throughout the life of the product. With maximum uptime engineered into the product, Consolidated sterilizers offer a superior return on investment as demonstrated through thousands of installations worldwide.

STERILIZER CONSTRUCTION

Sterilizer Chamber

Consolidated steam sterilizer vessels are manufactured with an inner chamber and a full outer jacket. The inner chamber is available in either type 316L stainless steel or nickel-clad steel construction. Jacket construction is available in carbon steel, type 304L stainless steel or type 316L stainless steel. Material selection is directly related to the chemical properties of available water supply and intended application. All vessels with type 316L stainless steel inner chambers are polished to a high luster finish and passivated. Sterilizers are equipped standard with a 1/2" NPT port for use with validation or process measurement. Pressure vessels are welded in compliance with ASME Section VIII, Division I.

Chamber Door and Gasket System

Consolidated's sterilizer doors are designed with redundant, independent mechanical and software features to ensure maximum safety. Door design specifications meet all ASME code requirements.

- Multiple door arms assure that, in the event of a failure of any one arm, the door will continue to support the load within performance specifications.
- Door engagement is clearly visible to confirm closure.
- An electrical door switch ensures that the door is fully closed and locked prior to the start of the cycle. If the signal is lost during a sterilizing cycle, the cycle is automatically aborted.
- The door pressure clutch assembly is activated by chamber pressure to lock the door. Chamber pressure forces a membrane against the clutch plate, engaging the lock to permit tightening, but not loosening of the door.
- As the handle is turned to the closed position, the latching arms extend out into the door end-frame. Full rotation of the door handle presses the door against the chamber sealing surface thereby compressing the seal, and activating the electrical door limit switch.
- Consolidated hinged door autoclaves use solid silicone gaskets that do not require high pressure air, steam or vacuum to operate. Instead, the act of closing the door compresses the silicone gasket to create a secure and reliable seal. In the event that the gasket fails, the door can still be easily opened and the gasket quickly replaced.
- Pass-thru (double-door) sterilizers may be ordered with optional door interlocks. This electro-mechanical lock on each door minimizes the chance of cross-contamination between contained and uncontained areas by preventing both doors from being opened simultaneously. Additionally, this feature prevents the uncontained side door from opening until a sterilization cycle has successfully completed.

Components

- Piping, fittings, and valves are available in stainless steel or brass/bronze. All parts and components subject to repair are publicly available (i.e. non-proprietary) from open market sources, including controls, valves and fittings.
- Safety relief valves and drains are integral to the plumbing configuration.
- Baffled steam inlets minimize direct condensate on the load, reduce load wetting, and help assure proper steam uniformity within the chamber.
- Cabinet insulation retains heat and minimizes heat loss (see Table 10) to the room. The sterilizer jacket and all steam service piping include a minimum 1" fiberglass-based insulation.

- An integral wastewater cooling function reduces discharge temperature to the drain to less than 140° F (60° C).
- On units equipped with steam generators, a manual reset pressure switch is included to back up the safety relief valve by automatically shutting down the steam generator if an overpressure condition exists.
- Easy-to-read pressure gauges ensure simple and safe operation.
- Other components required for the intended application may include a steam generator, vacuum pump, water ejector, etc. depending on the options chosen.

Control and Monitoring System

Consolidated offers a state-of-the-art control system built from industry standard, open source components for international availability of parts and service. Consolidated's X1™ controllers offer proven reliability, based on an industrial PLC platform programmed specifically for Consolidated's sterilizers, complete with modern user interface and an intuitive touchscreen display (see chart on page 5).

- Permits industry standard and custom sterilizer cycles.
- Simplifies operation with intuitive operator interfaces and optional features allow the ability to add favorite shortcuts for frequently used cycles and ability to prevent users from modifying sterilization parameters on individual cycles.
- Assures quality control and process integrity.
- Features sterilizer cycle quality reporting and optional printed documentation.
- Internal battery retains all data in memory for at least 6 months.

Cloud-Based Monitoring and Data Collection

All Consolidated sterilizers may be equipped with the option to connect to the internet (via Ethernet or Wi-Fi) to allow remote monitoring, alerting and data collecting. All data is secured using HTTPS/TLS encryption and protected using 2-factor authentication. This system has the following capabilities:

- View the real-time status of the autoclave from any computer, smart phone or tablet using a standard web browser.
- Subscribe to and receive SMS/text and email alerts regarding cycle completion, cycle abort, alarm conditions, PM reminders and usage tips.
- View and download historical cycle data showing User ID, cycle name, cycle time, cycle completion status and all errors or alarms, as applicable.

EcoCalendar™

The X1 controls are equipped with a calendar-based automatic start-up and shut-down feature known as EcoCalendar. This feature helps minimize utility consumption and HVAC load through a software controlled, automatic steam shut-off program. Utilities can be programmed for automatic start-up and shut-down based on time of day and day of the week.

Auto Idle Shut-Off

Like the EcoCalendar, this feature helps save energy by shutting the autoclave off when not in use. It functions similarly to a "sleep-mode" for your home computer. Simply set the desired idle time and the autoclave will enter Sleep Mode after the set idle time has elapsed.

Calibration

All temperature and pressure sensors on the sterilizer can be calibrated using an intuitive three-point calibration method.

Printer

An optional impact printer can be integrated into the main control panel. Printout includes all important information regarding the sterilization cycle recorded at user-defined intervals. Information includes: operator identification, cycle type, cycle parameters, cycle phase, time, chamber pressure and temperature, alarms or messages and cycle completion status.

Alarms

Detailed performance and function alarms are included with the X1™ controller, as well an alarm history report visible on the touchscreen. Standard safety alarms are included in all Consolidated sterilizers. Process alarms are documented and communicated both audibly and visually.

Cycle Safeguards

The following cycle safeguards help assure safe operation.

- No cycle can start unless the door is properly closed and locked.
- Control inputs automatically reject incorrect cycle parameters.
- Chamber gauges are installed on the operating end of the sterilizer to display pressure in psig and vacuum in inches-Hg.
- Exhaust is automatically condensed and cooled to a safe drainage temperature.
- Multi-rate liquid exhaust allows users to select an exhaust rate above and below an adjustable temperature set-point. This prevents boil-over of liquids and reduces total cycle time.
- Emergency Stop button cuts power to all 120VAC outputs and stops all processes.

Steam Sources

Consolidated sterilizers can operate on house steam or steam produced by integral or remote steam generators. Incoming water quality is always a primary consideration in selection of a steam generator (see Table 9).

Selection of the steam source is based on facility steam availability and other factors associated with sterilizer use and throughput.

House Steam

In most situations standard house steam, when available, is adequate. An inlet steam filter may be required to clean the steam prior to injection into the sterilizer plumbing system.

Electric Steam Generator

When house steam is not available, an electric boiler may serve as the steam source. Higher wattage generators produce a higher rate of steam to the chamber. Standard voltages available are 208, 240, 380, 480. Three-phase or single-phase voltage connections are available.

- Integrated Boiler

  Consolidated can provide an integral (fits under the sterilizer chamber) steam generator up to 45 kW.

  A standard steam boiler, constructed of carbon steel, is utilized on units fed with tap, softened or RO water. (See Table 9 for water quality requirements).

  A clean steam boiler, constructed of type 316L stainless steel, is required when the water quality feed is >1 MΩ•cm. This option typically requires that the sterilizer be constructed with a stainless-steel chamber, jacket, and plumbing.
- Remote Boiler

  Steam generators larger than 45 kW are typically too large to fit beneath the sterilizer chamber and must be remote mounted. Remote boilers are available up to 180 kW.

Electric/Steam Combination

Sterilizers can be configured to accommodate both house steam and an integral electric generator. This feature allows for easy switching between either steam sources.

Steam-to-Steam Generator

A steam-to-steam generator provides clean steam to the sterilizer from a DI water source. A 316L stainless steel heat exchanger uses a house provided steam source and condensate return line to generate steam without the use of 3-phase power. This is useful when clean steam is required, but 3-phase power is not available. Generators can be provided integral to the sterilizer footprint.

Generator Blowdown

In facilities where water quality is poor, a generator blowdown function is required to flush impurities from the system and prevent collection of contaminants on the heating elements. The blowdown function can be initiated manually or ordered as an automatic blowdown function if desired.

Air Removal

Depending on the application and required cycle, air removal may be achieved by gravity displacement or mechanical assistance through vacuum for pre- and post-cycle use as required.

- For gravity air removal, the bouyancy of steam is used to displace the air.
- For pre-cycle vacuum, Consolidated offers a choice of a water-ejector vacuum system, or a water-minimizing liquid ring pump.
- For post-cycle vacuum where drying assistance is desired, the sterilizer can use a water-ejector vacuum system or a water-minimizing liquid ring pump.
- Following completion of the post-vacuum function and throughout return to ambient pressure equilibrium, the returning air is filtered through a 0.3 micron bacteria-retentive HEPA filter.

Shelving

Shelves, carts and other accessories are available to suit specific applications. Shelves and racks are constructed of electro-polished type 316L stainless steel. Interior shelving options include:

- Option 1: One (1) stationary full-length wire-grid bottom shelf and one (1) upper stationary shelf suspended in the middle of the chamber on shelf brackets.
- Option 2: One (1) stationary full-length wire-grid bottom shelf and two (2) upper stationary shelves suspended on two evenly spaced shelf brackets.
- Option 3: One (1) extendable full-length wire-grid bottom shelf and one (1) upper extendable shelf suspended in the middle of the chamber on shelf brackets.
- Option 4: One (1) extendable full-length wire-grid bottom shelf and two (2) upper extendable shelves suspended on two evenly spaced shelf brackets.

Sterilizer Mounting

Consolidated sterilizers are available for installation as floor-standing cabinet-enclosed units with a stainless-steel superstructure to conceal plumbing and wiring. These sterilizers are also available for installation as recessed into one or two walls. Hook-ups for utility connections can be located anywhere on the unit as required, however house connections must be within 5 feet of the unit unless otherwise specified prior to installation.

For Biological Safety Level 3 installations a Bioseal® can be installed to maintain the contamination integrity of the clean side. Utilities can be mounted at the non-contained side of the installation and in the front, rear or designated side of the cabinet.

Water Quality Compatibility (Stainless Steel vs. Non-Stainless Selection)

Materials that contact the water supply to the sterilizer, including the steam generator, water-cooled devices, water-actuated accessories, valves and piping must be compatible with the purity of the water. See Table 9.

- If deionized or distilled water or water with a purity greater than 1 MΩ•cm is supplied, then all such points of contact must be of stainless steel construction.
- If softened water, water purified by reverse osmosis or tap water with purity of less than 0.2 MΩ•cm is supplied, then such points of contact must be of carbon steel, bronze or brass construction, as appropriate.

Compliance and Certifications

Depending on desired application, Consolidated sterilizers can be certified for compliance to the following standards for performance and safety.

- ASME (American Society of Mechanical Engineers): Section VIII, Division I (Unfired Pressure Vessel) code.
- ASME: Section I Code (Miniature Boilers).
- ASME: CSD-1 Code (Controls and Safety for Boilers).
- CRN (Canadian Registration Number): requirements for pressure vessels.
- IEC (International Electrotechnical Commission):

  EN 61010-1:96—Safety requirements for electrical equipment for measurement, control, and laboratory use.

  EN 61010-2-041:96—Specific requirements for steam autoclaves.
- UL and cUL (Underwriters Laboratory): Standard 61010-1 and 61010-2.
- US NEC (National Electrical Code) and National Plumbing Code; NFPA-70.
- EN ISO 111345-R-8/93— AAMI (Association for the Advancement of Medical Instrumentation) Industry Standard for Moist Heat Sterilization.
- 21 CFR Part 11 (US Code of Federal Regulations, Section 21—Food and Drugs; Electronic Records; Electronic Signatures).
- ANSI/AAMI ST-8: Hospital Steam Sterilizers.

Consolidated Sterilizer Systems — The X1™ Control System

Consolidated's X1™ controllers offer proven reliability, based on an industrial PLC platform programmed specifically for Consolidated's sterilizers. The X1 control system has an intuitive user interface with modern touchscreen display and can be equipped with up to 50 programmable cycles. The entire system is built from industry-standard, open-source components for international availability of parts and service.

Operator Interface	
Display	7" (17.8 mm) Widescreen Color Touchscreen
Resolution	WVGA 800 x 400
Mounting Options	Front, Remote Panel, or Top

Industry Standard Sterilizer Cycles	
• Gravity	• Liquid

Optional Sterilizer Cycles	
• Pre-Vacuum	• Bowie-Dick (Air Removal Test)
• Liquid with Controlling Load Probe	• Vacuum Leak Test
• F_0 with Controlling Load Probe	• Air-Over-Pressure
• Low Temperature (Isothermal)	• Steam-Air Mix
• Continuous (Product Lifecycle Testing)	• ATF Bioreactor
• Rapid Cool	• Customized to Application

Sterilizer Control	
Configurable Cycle Parameters	Standard
Improper Parameter Rejection	Standard
E-Stop	Standard
Three Point Calibration of Sensors	Standard
Automatic Condensate Exhaust Management for all Cycles	Standard
Battery Backup of Program, Memory, & Configuration Data	Standard
Ability to Favorite Cycles	Optional

Green Features	
Energy Saver Eco Calendar for Scheduled On/Off Steam Supply	Standard
Auto Idle Shut-Off	Standard

Security and Process Integrity	
Multi-layered Password Security for Manager and Service	Standard
Ability for Manager to Lock Cycle Configuration	Optional
User Traceability Password Protection	Optional
Up to 50 Usernames and Passwords	Optional

Documented Cycle Data Information (On Printer or Cloud)	
User Defined Cycle Name	Standard
Start Time and Date	Standard
Cycle Type	Standard
Chamber Temperature/Pressures	Standard
Cycle Summary	Standard
Operator ID (If Applicable)	Standard
Cycle Set-Points and Parameters	Standard
Alarms	Standard

Audible Alarms (Also Displayed on Touchscreen)	
Cycle Complete, Sensor Failure, Over Temperature, Under Temperature, Over Pressure, Time Limit, Door Seal	Standard
Alarm History Report on Touchscreen	Standard

Connectivity	
Printer	Optional
Cloud-Based Monitoring & Data Collection via WiFi or Ethernet	Optional
Dry Contacts for Door Open, Alarm Condition, and/or Sterilizer On	Optional
SteriNET™ Connex (Remote Troubleshooting) via Ethernet	Optional

Sterilization Cycles

Consolidated sterilizers can be easily configured for numerous cycles and functions. Each cycle is customizable to meet user specific requirements. All cycle parameters are easily viewed prior to and during the cycle run. The following cycles are pre-configured and installed on all sterilizers:

Gravity
The gravity cycle uses gravity to displace the air in the chamber with pressurized steam. This cycle is used mainly for unwrapped and nonporous goods. The operator may select a sterilization temperature anywhere between 212° F and 275° F (100° C and 135° C), as well as sterilization time and dry time (see Figure 1).

Liquid
The liquid cycle prevents boil-over when vented liquids are sterilized. The controller is factory-configured to automatically release steam pressure at an adjustable exhaust rate. The operator may select a sterilization temperature anywhere between 212° F and 275° F (100° C and 135° C), as well as sterilization time (see Figure 2).

Additional Sterilization Cycles (available upon request)

Gravity with Post-Vacuum Drying
This cycle draws a vacuum following sterilization and significantly decreases drying time. Post-vacuum is usually used for wrapped goods, fibers, rubber, bedding, glassware and similar loads. The operator may select a sterilization temperature anywhere between 212° F and 275° F (100° C and 135° C), as well as sterilization time and dry time (see Figure 3).

Liquid with Load Probe
This cycle uses a temperature probe placed within the liquid load to detect, display and print temperature. Applications include sterilization of temperature-sensitive liquids or large volume liquid sterilization (i.e. >2 liter flasks).

Pre-Vacuum
This cycle performs a series of steam pulses and vacuum draws prior to sterilization to assure that air has been removed from the load. This also permits the ability to vacuum dry. The number of pulses, pulse steam pressure, vacuum pulse pressure, sterilization time and temperature, and dry time are customizable for each cycle (see Figure 4).

Bowie-Dick (Air Removal Test)
Available on pre-vacuum units only. This air-removal test cycle validates the vacuum function using ad hoc test packs as per requirements listed in AAMI ST-8.

Vacuum Leak Test
Available on pre-vacuum units only. This cycle provides easy verification of vacuum depth, vacuum seal and chamber piping integrity. Detects leaks greater than 1 mmHg (1 Torr) per minute.

Effluent Decontamination
Retains liquid effluent, if any, within the chamber for the duration of the sterilization cycle. Aerosol effluent passes through a 0.2 micron hydrophobic HEPA filter with >99.999% efficiency; the filter is located within the chamber and is sterilized *in situ* to eliminate the need for disposal after each cycle. The filter is easily replaced by the user when required without special tools or service personnel.

Air-Over-Pressure
This cycle uses compressed air to maintain chamber pressure at or above the sterilization pressure until the liquid has cooled to a user adjustable temperature. This is useful for small volumes of liquid susceptible to boil-over (see Figure 5). Air is provided using a house air source.

Low Temperature
Typically used for temperature-sensitive goods, this function creates a zero-pressure, temperature only cycle between 190° F and 212° F (88° C and 100° C). Often referred to as an isothermal or inspissation cycle.

Rapid Cooling
Useful for rapidly cooling liquid media via an interior water spray mechanism or jacket quench, post-sterilization.

F_0 Cycle
Useful for heat-sensitive liquid media. Sterilization begins when temperature reaches 212°F and is completed when the desired F_0 set-point is reached. F_0 is adjustable.

Temperature/Pressure Ramping
Allows the user to specify a) the amount of time it takes for the load to rise to sterilization temperature/pressure and b) the amount of time it takes to exhaust the sterilizer chamber post-cycle. Ideal for loads that are sensitive to rapid pressure changes.

Continuous
Any sterilization cycle can be programmed to be continuously repeated (number of times is adjustable) without any input from the operator. Used for product lifecycle testing.

Steam-Air Mix
Useful for liquid-filled syringes or other sealed containers. Sterilization occurs at an elevated pressure relative to temperature. Extra pressure is achieved using a house air source.

ATF Bioreactor Cycle
The ATF bioreactor cycle is designed to permit the sterilization of hollow fiber filters while housed in bioreactors. ATF (Alternating Tangential Flow) is a technology used in the perfusion culture of mammalian cells, proteins and antibodies. This cycle incorporates a series of temperature ramps and hold times to prevent damage to the fiber filter.

Sterilizer Cycle Selection

Gravity. (Figure 1)

Steam flows through the sterilizer; temperature and pressure ramps slightly to a continuous flow purge.

The controller closes the exhaust valve and interior temperature and pressure ramp up to desired setpoint.

The program maintains dwell until desired time is reached, when pressure is released.

The interior is restored to ambient pressure although contents remain relatively hot.

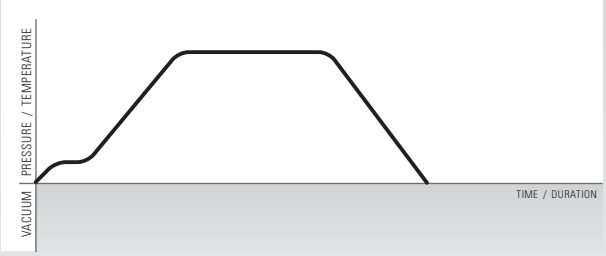

Figure 1: Gravity Cycle

Liquid. (Figure 2)

Steam flows through the sterilizer; temperature and pressure ramps slightly to a continuous flow purge.

The controller closes the exhaust valve and interior temperature and pressure ramp up to desired setpoint.

The program maintains dwell until desired time is reached. Pressure is gradually released to allow dissolved gases to reach equilibrium to prevent boil-over.

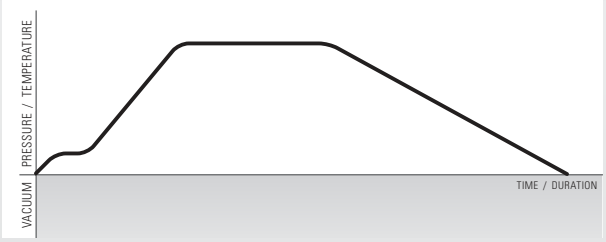

Figure 2: Liquid Cycle

Gravity with Post-Vacuum Drying. (Figure 3)

Steam flows through the sterilizer; temperature and pressure ramps slightly to a continuous flow purge.

The controller closes the exhaust valve and interior temperature and pressure ramp up to desired setpoint.

The program maintains dwell until desired time is reached, when pressure is released.

A vacuum system draws the interior atmosphere through ambient to negative pressure, accelerating drying time as programmed.

Once completed the vacuum is released and the load is restored to ambient pressure.

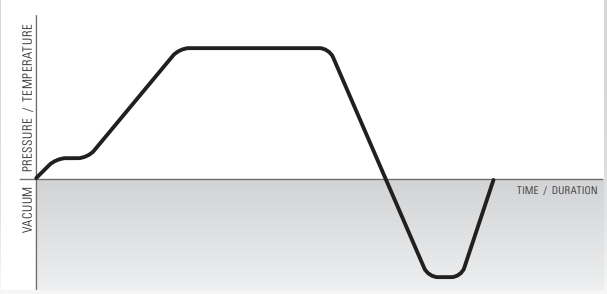

Figure 3: Gravity with Post-Vacuum Drying Cycle

Pre-Vacuum with Post-Vacuum Drying. (Figure 4)

Steam flows through the sterilizer; temperature and pressure ramps slightly to a continuous flow purge.

The controller closes the exhaust valve and interior temperature and pressure ramp to an intermediate setpoint without dwell.

A vacuum system draws the interior atmosphere to negative pressure to remove latent air from concealed pockets within the load.

The process is repeated per program and protocol. Following the final pre-vacuum pulse, the sterilizer ramps to desired setpoint.

The program maintains dwell until desired time is reached, when pressure is released.

If a post-vacuum program is used, the vacuum system draws the interior atmosphere through ambient to negative pressure, accelerating drying time as programmed, after which the vacuum is released and the load is restored to ambient pressure.

If a post-vacuum program is not used, the load is restored to ambient pressure.

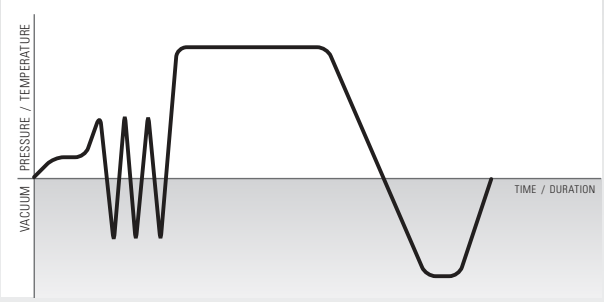

Figure 4: Pre-Vacuum with Post-Vacuum Drying Cycle

Liquid, Air-Over-Pressure. (Figure 5)

Usually used with smaller amounts of media to prevent liquid loss.

The air-over-pressure function operates identical to the liquid cycle except that pressurized air is injected to cool the load while maintaining pressure to displace steam.

After sterilization, air is injected, pressure is maintained, this prevents boil-over and minimizes evaporation.

Air pressure is then released and the load is restored to ambient pressure.

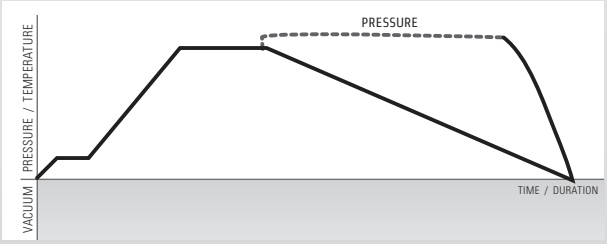

Figure 5: Liquid, Air-Over-Pressure Cycle

Options & Accessories

Consolidated offers a range of options and accessories to optimize and customize your sterilizer, to meet requirements for internal or third-party compliance, and to improve workflow. Options are factory installed and must be specified when ordering. For further information about available options and tailoring your sterilizer to meet your needs click here or contact Consolidated.

WaterEco® Water Saving Systems

The Consolidated WaterEco® Water Saving Systems reduce water consumption to the autoclave by up to 99%. Factory or field installed. Available on gravity and pre-vacuum units in the following configurations:

- **WaterEco® Basic:** Reduces cooling water by up to 90% without the use of electricity. This system functions by collecting autoclave drainage into a cooling reservoir. This effluent is cooled using a combination of air, previously cooled effluent and a minimal amount of cold water.
- **WaterEco® Plus:** Reduces cooling water consumption by up to 99% through a stainless steel heat exchanger that utilizes a facility chilled water supply. This system virtually eliminates once-through cooling water.
- **WaterEco® Vac Plus:** This full recovery system reduces water consumption by the vacuum and cooling systems by up to 99%. Designed to integrate with pre-vacuum autoclaves when facility chilled water is readily available. This system is the best solution to minimize water consumption.

Steam Generator

For installations where house steam is not available, a variety of integral or remote mounted steam generators are available in both carbon steel and 316L stainless steel construction. Consolidated will assist with selection according to site preparation requirements. Generators are available in electric, or steam-powered configurations. Integral generators are factory installed and must be specified when ordering.

Automatic Generator Blowdown

Recommended to remove accumulated impurities from the steam generator when used with low quality incoming water. Factory installed. Specify when ordering.

Water Purification System

High-purity water purification systems are available for facilities that do not meet the minimum water purity requirements (see Table 9) or that require clean steam. Option 1: A reverse osmosis (RO) water filtration system designed to pre-treat autoclave feed-water can be supplied (Model WPS-1200-RO). Option 2: If deionized water is required for clean steam generation, an RO/DI system that incorporates extra filtration to produce Type II deionized water (>1 MΩ resistivity) can be supplied (Model WPS-1200-DI).

Cloud

Connects the autoclave to the internet via Ethernet or WiFi for:

- Cloud-Based Data Storage: The same information that would be on a paper print-out is stored on a secure cloud platform where it can be accessed or downloaded as a PDF or CSV.
- Real-Time Monitoring: See when the autoclave is in use and what its status is from anywhere via phone, tablet, or computer.
- Cycle Alerts: Receive notifications via text or email for alerts such as "cycle over" as well as an email with a PDF of the cycle data.

Form C Dry Contacts

Offers dry connection to building monitoring system. Specify desired outputs when ordering: door open/close, power on/off or sterilize alarm conditions. Specify when ordering.

SteriNET® Remote Monitoring and Troubleshooting

SteriNET® Connex permits Consolidated engineers to provide quick, accurate and economical offsite diagnosis of operation problems through an Ethernet connection. This option is ideal for facilities located in remote areas where service assistance is hours or days away. This option includes one year of free, remote-transmitted software upgrades from the Consolidated technical support center.

Loading Cart & Transfer Carriage

A loading cart, mounted on rollers, with two stainless steel shelves and a wheeled transfer carriage. The transfer carriage mates to guides on the interior chamber tracks to ease loading and unloading of sterilization loads up to 500 lbs evenly distributed.

Interior Chamber Tracks

Chamber tracks may be installed into the sterilizer to permit use of an existing CSS cart & carriage or use with a future cart and carriage. Chamber tracks must be factory installed.

Chamber Finish

Chambers can be provided with a passivated and electropolished and/or high polished (mirror finish) to less than 10Ra interior surface.

Steam Inlet Filter

Recommended to clean dirty steam (i.e. remove particulates) from facility steam sources. Specify when ordering.

Stainless Steel Piping

Upgrade from brass/bronze piping & components to type 316 stainless steel for all product wetted surfaces.

Nickel-Clad Chamber

Recommended chamber material for sterilizing high-concentration salt solutions or if the feed-water or tap-water for steam generation has high chloride content. Nickle-Clad chambers are provided with a carbon steel jacket. Specify when ordering.

Automatic Jacket Blowdown

Recommended for liquid cycles. This option is used to exhaust steam in the chamber as well as the jacket to prevent liquid loads from boiling over. Factory installed. Specify when ordering.

Load Probe

Includes a temperature probe with lead wire permitting placement in the load to be sterilized such as liquid, red-bag or other. Sterilization cycle time is based on load temperature instead of chamber temperature. Factory installed. Specify when ordering.

Flood Switch

In the event of excessive liquid in the chamber or jacket, an alarm will sound and a message will be displayed warning the user about the flood condition. Factory installed. Specify when ordering.

Seismic Anchorage Details
May be required to meet building codes in seismically active areas. Contact your facility manager to determine if required. If ordered, Consolidated will provide anchor attachment points and suggested seismic anchorage details. Specify when ordering.

Validation Port
All CSS sterilizers are equipped standard with one 1/2" NPT opening into the chamber. An additional port of up to 1" NPT or 2" tri-clamp may be added.

Multi-Probe Sealing Gland
Multi-port gland permits safe installation of thermocouples or other probes inside the chamber. Factory installed. Specify desired quantity and location when ordering.

Uninterruptible Power Supply (UPS)
Allows the control system to remain on in the event of a brief power loss or brownout. Specify when ordering.

Sump Pump
Required when gravity drain is not available. Provides positive pump to remove condensate effluent to hard-plumbed drain. Specify when ordering.

Pass-Thru (Double-Door) Options

Dual Controls
For pass-thru models only. Provides full touchscreen controls mounted on each end of the unit for operation from within or outside the containment area. Printer, if included, located outside containment area only. Specify when ordering.

Pass-thru Door Interlock System
For pass-thru models only. Prevents opening of the sterilizer door on the non-contained side until completion of a sterilization cycle. Also prevents both doors from being opened simultaneously. This system is programmed to accommodate the desired direction of product flow and is equipped with a secondary touchscreen controller located on the non-contained side. Typically a requirement for BSL-3 labs, clean rooms, or other applications where flow direction is controlled. Factory installed. Specify when ordering.

Effluent Decontamination Control
Exclusively from Consolidated, this effluent decontamination system traps bacteria within the autoclave chamber and sterilizes it prior to release into the drain (Consolidated Patented Process). Any liquid effluent is held in the chamber for the duration of the sterilization cycle. All aerosol effluent passes through a 0.2 micron hydrophobic HEPA filter with >99.999% efficiency. The steam that sterilizes the products in the chamber also sterilizes the bacteria held by the filter. Filters are easily changed after use. Factory installed. Specify when ordering.

Bioseal® Biological Sealing Flange
The Bioseal® biological sealing flange, required for Biological Safety Level-3 (BSL-3) applications, employs a stainless steel barrier flange welded to the periphery of the sterilizer and another stainless steel barrier attached to the wall opening through which the sterilizer is installed. This arrangement is used to prevent the passage of airborne microorganisms from the contained side of the sterilizer to the uncontained side. A single piece solid-silicone gasket completes the seal between the building and the sterilizer thereby ensuring seal integrity is not compromised during normal expansion and contraction of the building. Specify when ordering.

Air Differential Seal
An Air Differential Seal is required for applications that require a negative or positive air pressure differential between two rooms adjoined with an autoclave. The seal prevents the bulk passage of air between areas maintained at a pressure differential. A stainless steel barrier flange is welded to the periphery of the sterilizer and solid-silicone gasket secures the welded seal to the wall and permits normal expansion and contraction of the building. Specify when ordering.

Vermin Seal
A vermin seal employs a metal barrier to impede rodents from passing through the space between a recessed-mounted autoclave and the wall opening. This is useful if a recessed autoclave is located in the same room as live rodents. Specify when ordering.

BSL-3 Package
Recommended options for pass-thru autoclaves installed in Biosafety Level 3 (biocontainment) labs:

- Dual Controls
- Pass-thru Door Interlock System
- Effluent Decontamination
- Bioseal
- Up to 50 Password Protected Usernames
- Lockable Cycle Parameters

For more information on BSL-3 configurations, options and requirements click here to read the Guide to BSL3 Autoclaves E-Book.

Validation

Validation protocols and/or execution of protocols is available from Consolidated for new or existing autoclaves. Steril-Q™ Validation Services & Documentation includes an array of documentation, tools and expertise required to successfully qualify and validate an autoclave within accepted protocols that comply with the current USA and international standards for steam sterilization as set forth in ISO 17665. The various protocols and services include:

- **Installation Qualification (IQ)**: Provides documented evidence that the equipment has been built and installed to specification, and that all supporting services (i.e., utilities such as electricity, water, and steam) are available and connected properly.
- **Operation Qualification (OQ)**: Provides documented evidence that the sterilizer operates in accordance with design specifications.
- **Performance Qualification (PQ)**: Documents the sterilizer's ability to achieve the desired outcome (i.e. sterilization of specific loads when operated in accordance with pre-defined operating procedures).
- **Steam Quality Testing (SQ)**: Documents the suitability of the steam delivered to the chamber, ensuring compliance with the requirements of ISO 17665. A successful test result ensures a predictable level of process lethality.
- **Factory Acceptance Testing (FAT)**: Evaluates the sterilizer after assembly to verify that its operation complies with design specifications prior to shipment from Consolidated's corporate headquarters.

Onsite validation and execution of protocols as well as cycle development services are available. For more information click here to read the Autoclave Validation E-Book.

Site Preparation and Utilities

General

Utilities of ample capacity required for operation of the sterilizer shall be provided at the place of installation at the facility. Key considerations include electric power availability, steam source, water type and flow capacity, and compressed air (if air-over-pressure or steam-air mix cycle is desired). For information on required utilities and locations refer to the sterilizer architectural drawings and Tables 3-6.

- Drain and ventilation considerations include wastewater and the facility HVAC system.
- Clearances include door and cart allowances, recommended 18–24" for access to plumbing, adequate load-bearing capacity of floor at installation site, and biointegrity.
- Consider the location of sprinklers, smoke detectors, and canopy capture hoods.
- Contact Consolidated or your Consolidated sales representative for planning and selection assistance.

Installation

Consolidated offers a choice of installation options to accommodate the facility schedule. In general, Consolidated can arrange for any of the following installation preferences:

- **Level 1:** Sterilizer start-up and user training.
- **Level 2:** Sterilizer uncrating, setting in place, leveling, final assembly, start-up, and user training.
- **Level 3A:** Sterilizer uncrating, setting in place, leveling, final assembly, final utility connections, start-up, and user training.
- **Level 3B:** Receiving the shipment, sterilizer uncrating, setting in place, leveling, final assembly, start-up, and user training.
- **Level 4 (Turnkey):** Receiving the sterilizer, uncrating, setting in place, leveling, final assembly, final utility connections, start-up, and user training.
- **Installation Supervision:** Consolidated will supervise on-site installation work performed by facility designated labor.

Standard Mounting Configurations

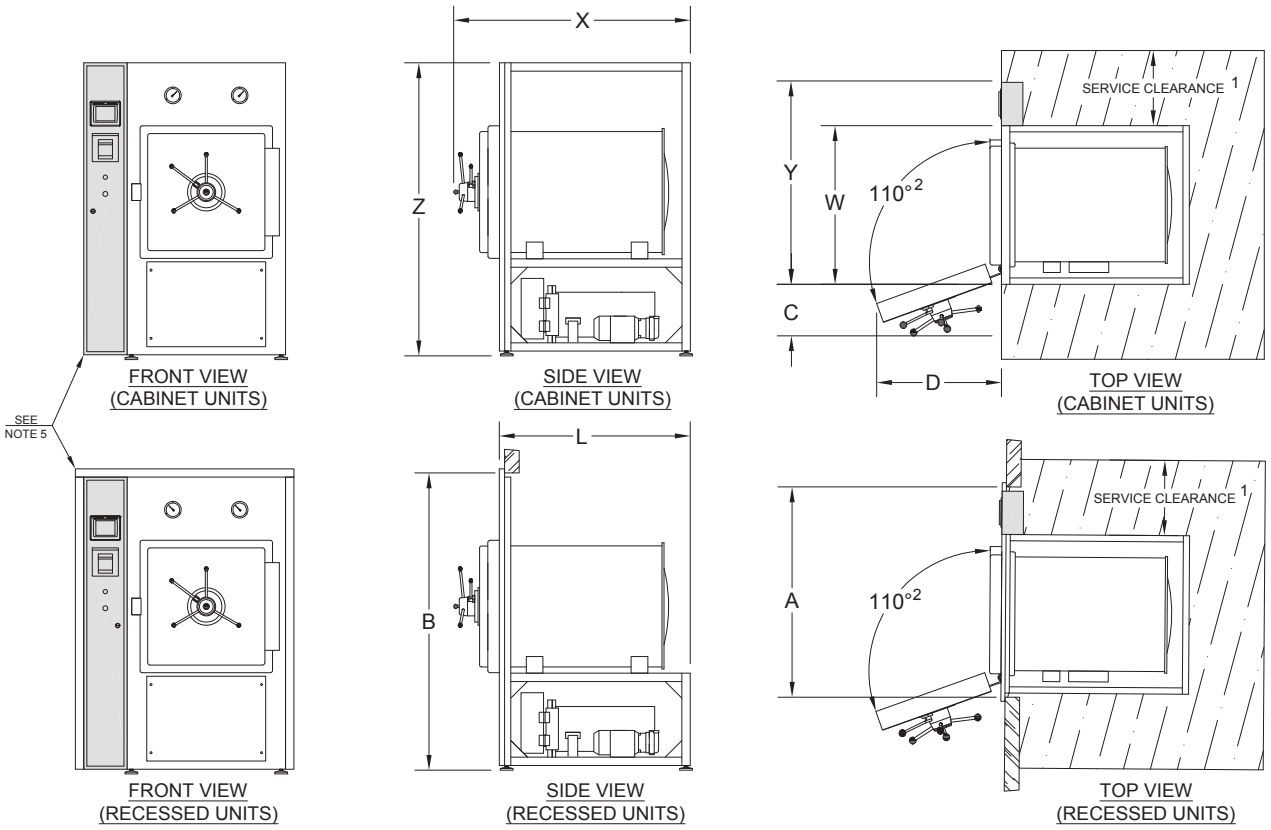

Table 1: Sterilizer Dimensions[3]

Model	SSR-2A	SSR-3A	SR-24A	SR-24B	SR-26A
Chamber Dimensions (w x h x f-b)	16" x 16" x 26" 40.6 x 40.6 x 66 cm	20" x 20" x 38" 50.8 x 50.8 x 96.5 cm	24" x 24" x 36" 61 x 61 x 91.4 cm	24" x 24" x 48" 61 x 61 x 122 cm	26" x 26" x 39" 66 x 66 x 99 cm
Volume	3.9 cu. ft (109L)	8.8 cu. ft (249L)	12 cu. ft (340L)	16 cu. ft (453L)	15.3 cu. ft (433L)
Overall Length (X)	42"[4] 106.7 cm	52" 132.1 cm	55" 139.7 cm	67" 170.2 cm	58" 147.3 cm
Overall Width (Y)	38.375" 97.5 cm	38.375" 97.5 cm	46.375" 117.8 cm	46.375" 117.8 cm	48.375" 122.9 cm
Overall Height (Z)[7]	71" 180.3 cm	71" 180.3 cm	71" 180.3 cm	71" 180.3 cm	71" 180.3 cm
Frame Length (L)	32"[4] 81.3 cm	42" 106.7 cm	42" 106.7 cm	54" 137.2 cm	45" 114.3 cm
Frame Width (W)	28" 71.1 cm	28" 71.1 cm	36" 91.4 cm	36" 91.4 cm	38" 96.5 cm
Wall Opening Width (A)	40.375" 102.6 cm	40.375" 102.6 cm	48.375" 122.9 cm	48.375" 122.9 cm	50.375" 128 cm
Wall Opening Height (B)	72" 182.9 cm	72" 182.9 cm	72" 182.9 cm	72" 182.9 cm	72" 182.9 cm
Minimum Door Swing Clearance (C)	10" 25.4 cm	11" 27.9 cm	12.5" 31.8 cm	12.5" 31.8 cm	12.75" 32.4 cm
Door Swing (D)	22.5" 57.2 cm	27" 68.6 cm	33.5" 85.1 cm	33.5" 85.1 cm	35.5" 90.2 cm

1) Recommended service clearance is 18-24" both sides and back. If necessary, service clearance can be decreased or adjusted to one side to accommodate facility specific space constraints.
2) SSR-2A and SSR-3A door swing is 180°. Door swing can be limited to 110° if required.
3) Additional options may require a larger footprint.
4) SSR-2A with electric generator frame length (L) and overall length (X) increase by 10".
5) The control housing is shipped detached from the sterilizer to allow passage through doorways, reducing pre-installation Overall Width (Y) by 10.375". When the sterilizer is installed, the control housing and electrical connections are easily attached.
6) All views contain configuration specific components. These are for illustrative purposes only, actual configuration may vary.
7) After adjustment, leveling feet may add up to 1 inch to the Overall Height (Z).

This page shows variations of recessed mounting to allow a sterilizer to fit into an existing narrow wall opening

These views show the sterilizer bumped out 6" from the wall, to allow the control column to sit in front of the wall.

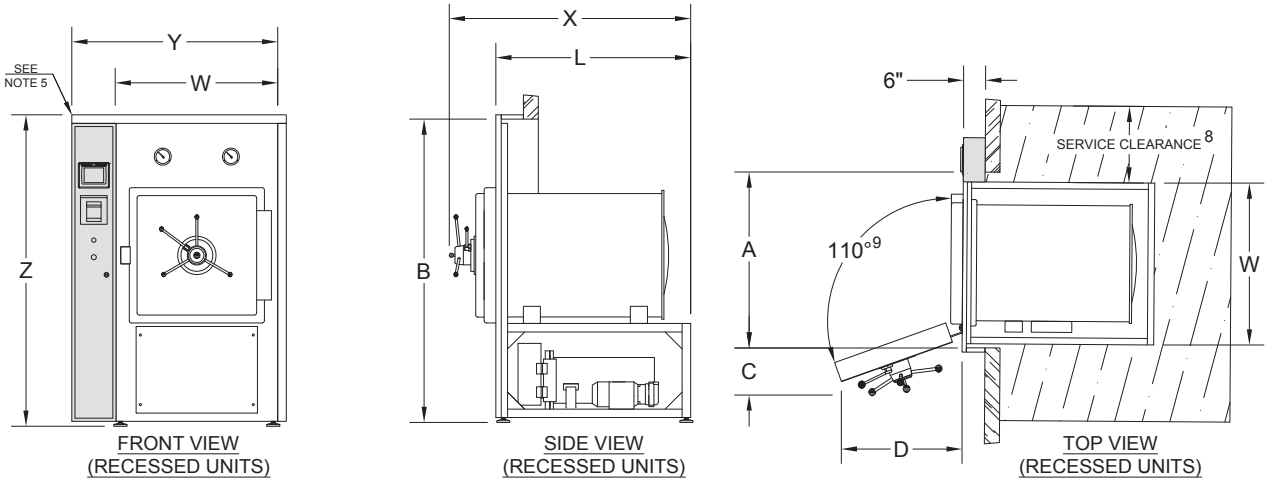

These views show fully functional controls mounted on top of a unit, removing the need for a control column.

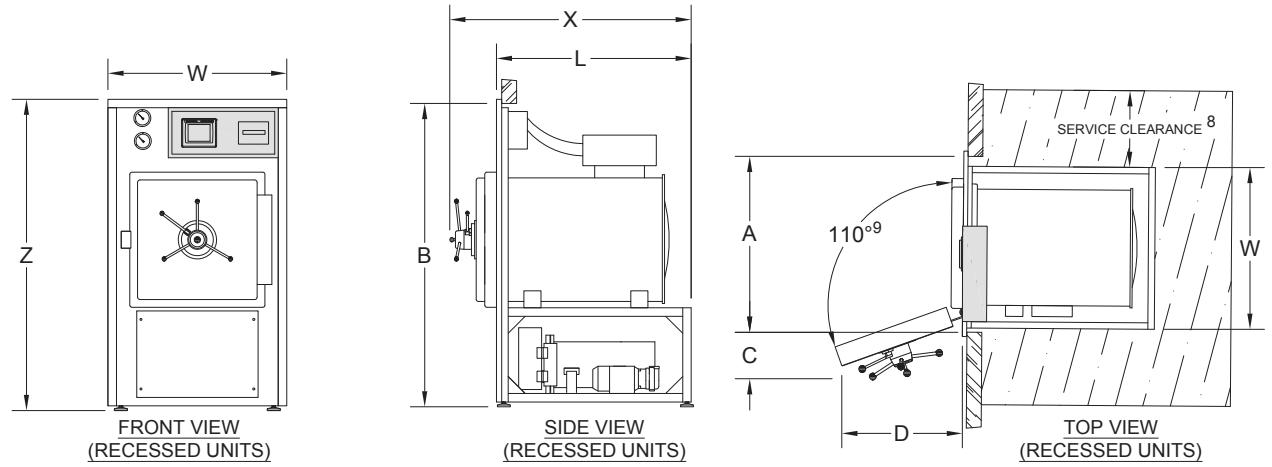

Table 2: Sterilizer Dimensions[10]

Model	SSR-2A	SSR-3A	SR-24A	SR-24B	SR-26A
Chamber Dimensions (w x h x f-b)	16" x 16" x 26" 40.6 x 40.6 x 66 cm	20" x 20" x 38" 50.8 x 50.8 x 96.5 cm	24" x 24" x 36" 61 x 61 x 91.4 cm	24" x 24" x 48" 61 x 61 x 122 cm	26" x 26" x 39" 66 x 66 x 99 cm
Volume	3.9 cu. ft (109L)	8.8 cu. ft (249L)	12 cu. ft (340L)	16 cu. ft (453L)	15.3 cu. ft (433L)
Overall Length (X)	42"[11] 106.7 cm	52" 132.1 cm	55" 139.7 cm	67" 170.2 cm	58" 147.3 cm
Overall Width (Y)[12]	38.375" 97.5 cm	38.375" 97.5 cm	46.375" 117.8 cm	46.375" 117.8 cm	48.375" 122.9 cm
Overall Height (Z)	71" 180.3 cm	71" 180.3 cm	71" 180.3 cm	71" 180.3 cm	71" 180.3 cm
Frame Length (L)	32"[11] 81.3 cm	42" 106.7 cm	42" 106.7 cm	54" 137.2 cm	45" 114.3 cm
Frame Width (W)	28" 71.1 cm	28" 71.1 cm	36" 91.4 cm	36" 91.4 cm	38" 96.5 cm
Wall Opening Width (A)	29" 73.4 cm	29" 73.4 cm	37" 93.8 cm	37" 93.8 cm	39" 98.9 cm
Wall Opening Height (B)	72" 182.9 cm	72" 182.9 cm	72" 182.9 cm	72" 182.9 cm	72" 182.9 cm
Door Swing Clearance (C)	10" 25.4 cm	11" 27.9 cm	12.5" 31.8 cm	12.5" 31.8 cm	12.75" 32.4 cm
Door Swing (D)	22.5" 57.2 cm	27" 68.6 cm	33.5" 85.1 cm	33.5" 85.1 cm	35.5" 90.2 cm

8) Recommended service clearance is 18-24" both sides and back.If necessary, service clearance can be decreased or adjusted to one side to accommodate facility specific space constraints.
9) SSR-2A and SSR-3A door swing is 180°. Door swing can be limited to 110° if required.
10) Additional options may require a larger footprint.
11) SSR-2A with electric generator frame length (L) and overall length (X) increase by 10".
12) Top mount control units lack standalone control columns, reducing Overall Width (Y) by 10.375".

Typical Utility Requirements

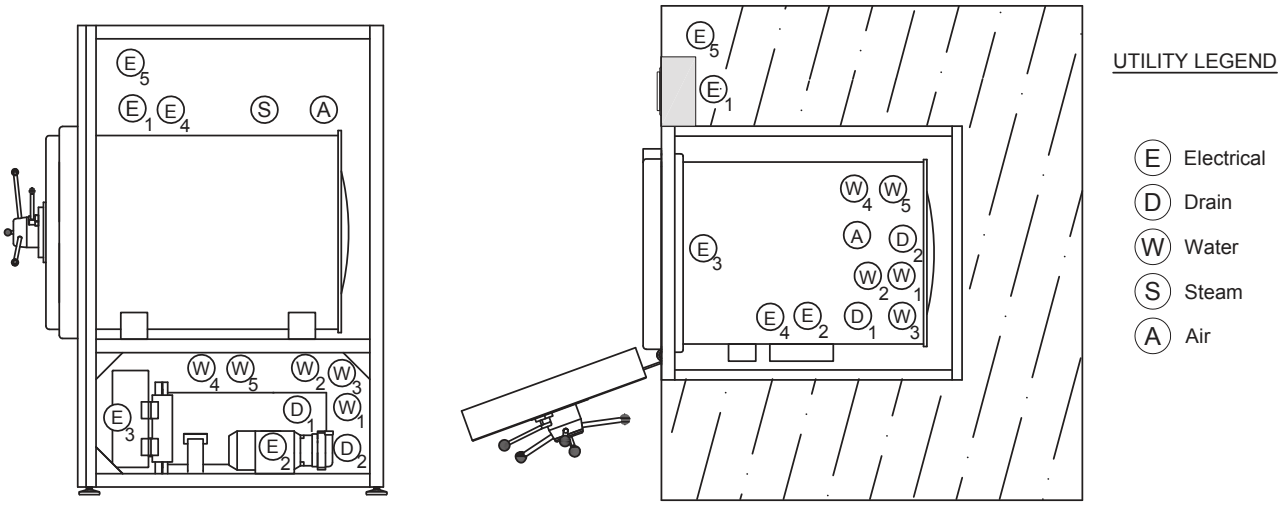

SIDE VIEW

TOP VIEW

Table 3: General Connections

Name	Symbol	Connection on Sterilizer	MEP Requirements[15]
Wastewater Cooling	W1	½" NPT	45 psig dynamic min, 80 psig static max, ¾"-1" NPT, 12 GPM capacity, with shut off valve and union[13]
Controls System	E1	NEMA 3-Prong Plug	110V/220V, 20 Amp minimum; non-GFCI outlet
Ethernet Port	E5	RJ-45	Standard RJ-45 ethernet cable with internet access
Sterilizer Drain	D1	1½" Sweat (NPT on units with WaterEco)	2½" air gap, 3" diameter minimum funnel required, location external to unit footprint recommended
Direct Steam (Optional)	S	½" NPT	50-80 psig dynamic, ¾" NPT, 180 lbs/hr capacity, insulated line with shut-off valve and union
Dry Contacts (Optional)	E4	2-Wire Terminal	Signal wires compatible with Form C Dry Contacts
Compressed Air (Optional)	A	½" NPT	50 psi dynamic min, 10-35 SCFM, 99% dry & oil free, backflow preventer not provided by CSS

Table 4: Optional Vacuum Systems (maximum one per unit)

Name	Symbol	Connection on Sterilizer	MEP Requirements[15]
Economy Post-Vac	W2	½" NPT	45 psig dynamic min, 80 psig static max, ¾"-1" NPT, 12 GPM capacity, with shut off valve and union[13]
Hi-Vac with Water Ejector	W2	½" NPT	45 psig dynamic min, 80 psig static max, ¾"-1" NPT, 12 GPM capacity, with shut off valve and union[13]
Booster Pump	E2	Hard Wire	115V/208-230V, single phase, minimum 20 Amp circuit required
Vacuum Pump - Electrical	E2	Hard Wire	208/240/480V, 3-phase, minimum 20 Amp circuit required
Vacuum Pump-Water	W2	½" NPT	45 psig dynamic min, 80 psig static max, ¾"-1" NPT, 12 GPM capacity, with shut off valve and union[14]

13) W1 and W2 cold water connections can be from a single source for a combined 12 GPM capacity. Water quality must comply with the General Vacuum Device & Quench specification in Table 9

Table 5: Optional Electric Steam Generator

Name	Symbol	Connection on Sterilizer	MEP Requirements[15]
Power Supply	E3	Hard Wire	Available in 208/240/380/480V, 3-phase, see Table 7 for Amp Draw
Generator Water Feed	W3	½" NPT	45 psig dynamic min, 80 psig static max, ½" NPT, 5 GPM capacity, with shut off valve and union[15]
Manual Generator Drain	D2	½" NPT	Route to facility drain

14) Generator feedwater must comply with the Generator Water Feed specification in Table 9.

Table 6: Optional Chilled Water (WaterEco Plus and Vac Plus Units Only)

Name	Symbol	Connection on Sterilizer	MEP Requirements[15]
Chilled Water Feed	W4	1" NPT	20 psi dynamic min, 35°F-50°F max temperature, 10 GPM capacity
Chilled Water Return	W5	1" NPT	-5 psi drop on return side, +15°F max rise

15) For a more detailed list of MEP requirements and specifications see "Autoclave Installation and Utility Overview" document.

Table 7: Power and Steam Usage[16]

Power and Steam Usage			Electrically Heated					Steam Heated		
								Steam Consumption		
Model	Chamber Dimensions (w x h x f-b)	Air Removal Method	Generator Size (KW)	Generator Current (amps)[17]				Peak (lb/hr)	Per Cycle (lb/cycle)	Idle (lb/hr)
				208V	240V	380V	480V			
SSR-2A	16" X 16" X 26" 40.6 X 40.6 X 66 cm	Gravity	25	69	60	37	30	180	17	5
		Vacuum	25	69	60	37	30	180	25	5
SSR-3A	20" x 20" x 38" 50.8 x 50.8 x 96.5 cm	Gravity	25	69	60	37	30	180	20	7
		Vacuum	25	69	60	37	30	180	35	7
SR-24A	24" x 24" x 36" 61 x 61 x 91.4 cm	Gravity	25	69	60	37	30	180	30	7
		Vacuum	30	83	72	46	36	180	50	7
SR-24B	24" x 24" x 48" 61 x 61 x 122 cm	Gravity	25	69	60	37	30	180	35	9
		Vacuum	30	83	72	46	36	180	55	9
SR-26A	26" x 26" x 39" 66 x 66 x 99 cm	Gravity	25	69	60	37	30	180	35	9
		Vacuum	30	83	72	46	36	180	55	9

16) Assuming 30 Minute sterilizing time at 250°F (121°C) and 5 minute drying time.
17) Nominal current drawn by a 3-phase generator. Local codes and regulations may affect breaker size. Single phase available if required.

Table 8: Water Consumption (Per Chamber)[18]

Model	Chamber Dimensions (w x h x f-b)	Air Removal Method	Water Consumption							
			Cold Water					Hot/Treated Water		
			Peak (gpm)	Per Cycle (gal/cycle)	Per Cycle With WaterEco® Basic (gal/cycle)	Idle (gph)	Idle With WaterEco® Basic (gph)	Peak (gpm)	Per Cycle (gal/cycle)	Idle (gph)
SSR-2A	16" X 16" X 26" 40.6 X 40.6 X 66 cm	Gravity	6	7	1	5	1	1	3	1
		Ejector	6	45	42	5	1	1	3	1
		Vac Pump	6	16	13	5	1	1	3	1
SSR-3A	20" x 20" x 38" 50.8 x 50.8 x 96.5 cm	Gravity	6	15	2	7	1	1	4	1
		Ejector	6	62	55	7	1	1	4	1
		Vac Pump	6	28	21	7	1	1	4	1
SR-24A	24" x 24" x 36" 61 x 61 x 91.4 cm	Gravity	6	20	3	8	1	1	4	1
		Ejector	6	73	64	8	1	1	4	1
		Vac Pump	6	36	26	8	1	1	4	1
SR-24B	24" x 24" x 48" 61 x 61 x 122 cm	Gravity	6	27	4	9	1	1	4	1
		Ejector	6	87	75	9	1	1	5	1
		Vac Pump	6	45	33	9	1	1	5	1
SR-26A	26" x 26" x 39" 66 x 66 x 99 cm	Gravity	6	26	4	9	1	1	4	1
		Ejector	6	85	73	9	1	1	5	1
		Vac Pump	6	44	32	9	1	1	5	1

18) Assuming 30 minute sterilizing time at 250°F (121°C) and 5 minute drying time.

Table 9: Nominal Water Quality Requirements

Characteristic	Carbon Steel Steam Generators[19]		General Vacuum Device & Quench	
	Recommended Condition	Maximum Condition	Recommended Condition	Maximum Condition
Temperature [°F (°C)]	As Supplied	140 (60)	40-60 (4-16)	70 (21)
Total Hardness (mg/L)	17	85	10-85	171
Alkalinity (mg/L)	50-180	350	50-180	350
Total Dissolved Solids (mg/L)	50-150	250	50-200	500
pH	7.5-8.5	7.5-9.0	6.8-7.5	6.5-9.0
Total Silica (mg/L)	0.1-1.0	2.5	0.1-1.0	2.5
Resistivity (Ω•cm)	2,000-6,000	26,000[20]	2,000-26,000	500,000

19) Stainless-steel generators require deionized water with resistivity ≥ 1MΩ•cm.
20) If water supplied is greater than 26,000 Ω•cm contact Consolidated for recommendation.

Table 10: Weight & Heat Loss Data

Model	Heat Source Options	Max. Operating Weight[21]	Peak Heat Loss (BTU/hr at 70°F [21°C])		
			Cabinet	Recessed	
			To Room	Front of Wall	Back of Wall
SSR-2A	Steam	1210 lbs	4300	1600	2700
	Electric	1385 lbs	6050	2300	3750
SSR-3A	Steam	1800 lbs	7000	2500	4500
	Electric	1975 lbs	8750	3300	5450
SR-24A	Steam	2500 lbs	8890	3000	5890
	Electric	2675 lbs	11140	3800	7340
SR-24B	Steam	2750 lbs	11330	4000	7730
	Electric	2925 lbs	13580	4800	8780
SR-26A	Steam	2700 lbs	11950	4300	7650
	Electric	2875 lbs	14200	5100	9100

21) Assuming chamber fully loaded with flasks filled 25% with water.

Notes

3 ENTERPRISE RD. SUITE C | BILLERICA, MA 01821
P: 617.782.6072 | **F:** 617.787.5865 | INFO@CONSTERIL.COM | **CONSTERIL.COM**

Featuring Green Technology for Energy Savings and Minimal Environmental Impact

Made in the U.S.A.

©2018 Consolidated Machine Corporation V1 7/18